Twin / suspension kit 4m

110652XX_110654XX_106330XX_110606XX_110607XX_110617XX_110618XX_110619XX

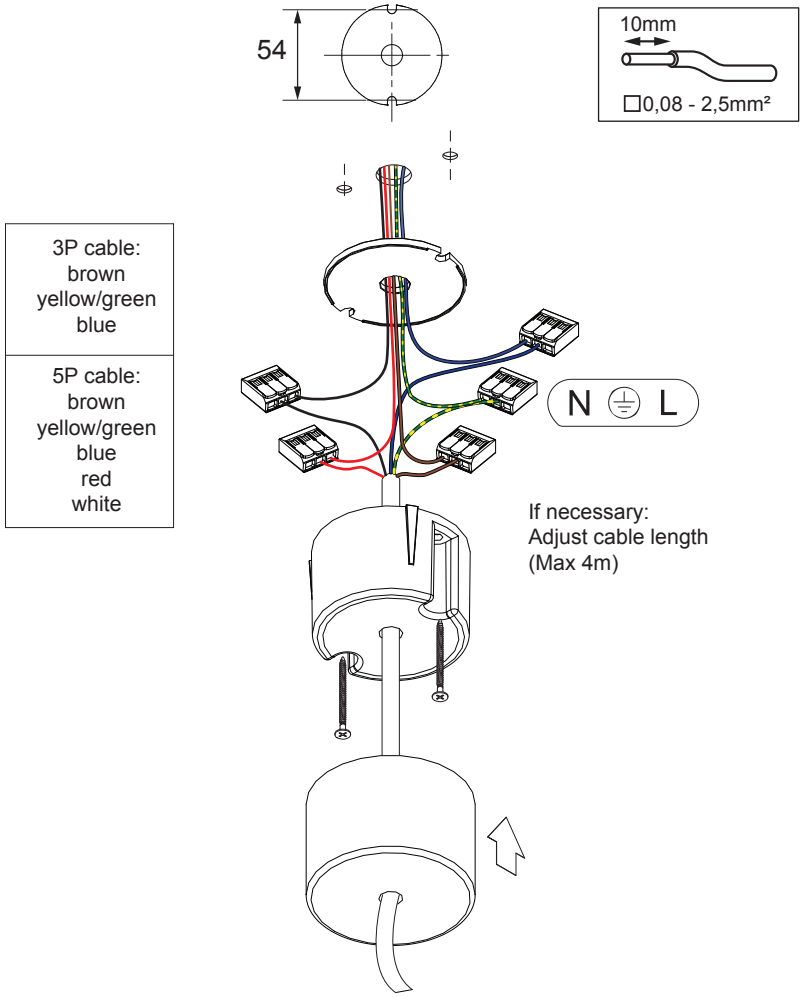

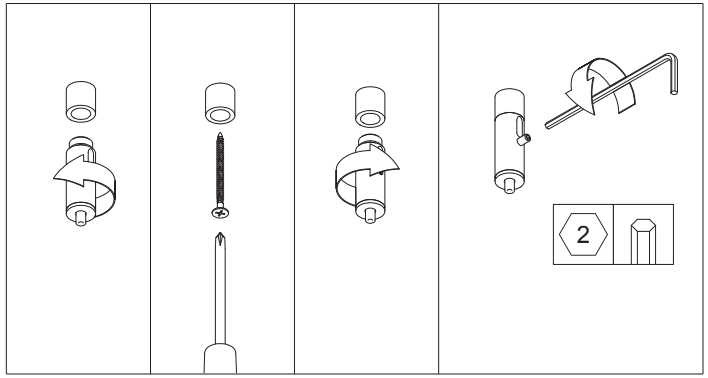

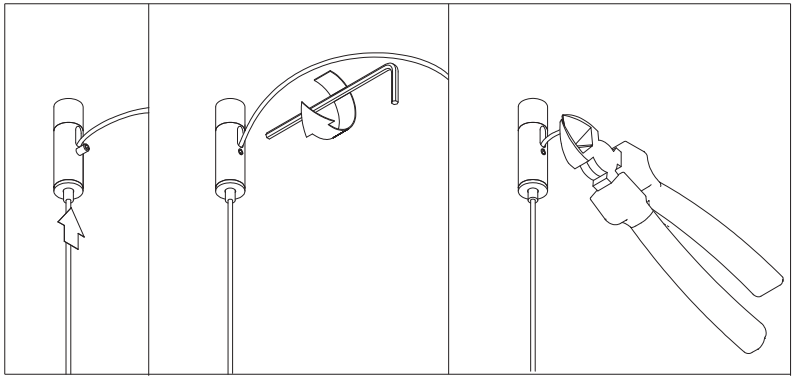

V0 - 13/12/2017